REVISIONS														
LTR	ZONE	DESCRIPTION		DWN	CHK	STRUCT	MATL	THRM CONT			ENGR	DSGN SUPV	DATA MGT	RELEASE DATE
A		INITIAL RELEASE	CODE D	SEE TITLE BLOCK										

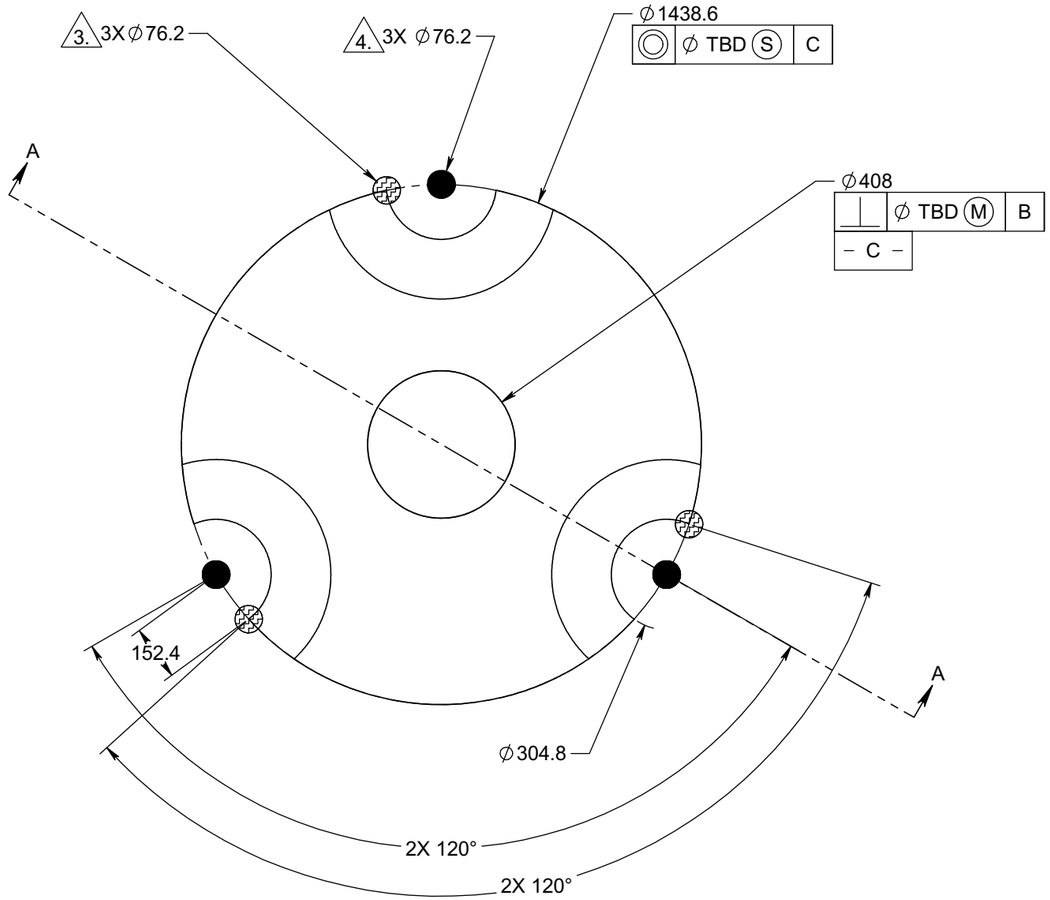

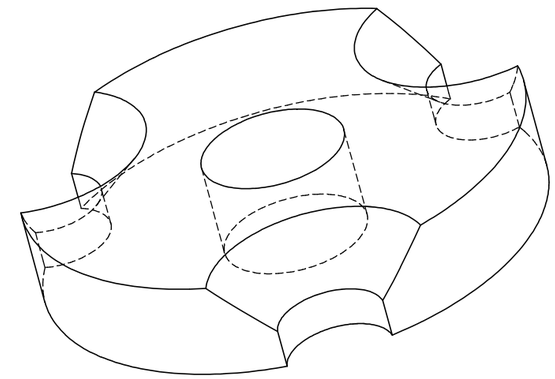

TRIMETRIC VIEW
SCALE 1 : 8

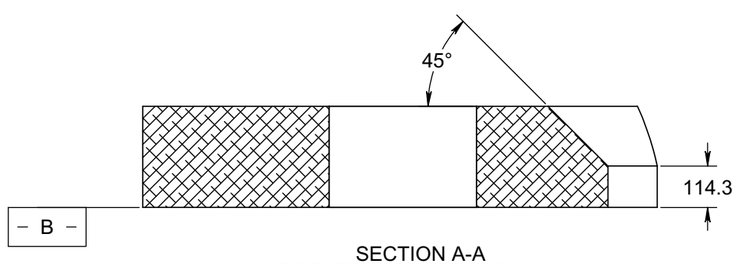

SECTION A-A
ROTATED 30 DEGREES CCW

7. DEPLOYMENT BAG LEASH MUST CONNECT DEPLOYMENT BAG DIRECTLY TO DROGUE TRIPLE RISER CONFLUENCE POINT. FURTHER DETAILS OF INTERFACE WILL BE DESIGNED COOPERATIVELY BETWEEN JPL AND VENDOR.

6. CENTER OF GRAVITY (CG) FOR PLATE WITH MOUNTED PARACHUTE MUST BE WITHIN TBD MM OF CENTER OF PLATE.

5. CONTRACTOR MUST DELIVER MAIN CHUTE IN DEPLOYMENT BAG MOUNTED BY RIP STITCH TO JPL-SUPPLIED PLATE (NOT SHOWN).

4. TRIPLE RISERS FOR DROGUE PARACHUTE MUST ATTACH TO ELECTRICALLY COMMANDABLE ATTACHMENT/RELEASE MECHANISMS WITHIN DESIGNATED CIRCULAR INTERFACE ZONES.

3. TRIPLE RISERS FOR MAIN PARACHUTE MUST ATTACH TO ELECTRICALLY COMMANDABLE ATTACHMENT/RELEASE MECHANISMS WITHIN DESIGNATED CIRCULAR INTERFACE ZONES.

2. MOUNTED DEPLOYMENT BAG SHALL NOT EXTEND OUTSIDE BOUNDARIES OF SHOWN SOLID (0.373 M^3).

1. THIS IS THE DROP VEHICLE MECHANICAL INTERFACE CONTROL DRAWING FOR THE MAIN AND DROGUE PARACHUTES.

NOTES: UNLESS OTHERWISE SPECIFIED

CONCEPTUAL INTERFACE CONTROL DRAWING

QTY REQD	PARTS LIST
-	-
NEXT ASSEMBLY	USED ON
APPLICATION	

UNLESS OTHERWISE SPECIFIED
DIMENSIONS ARE IN INCHES
TOLERANCES
DECIMALS .XX ± .03 .XXX ± .010
ANGLES ± 1/2°
MACHINE FINISH 125
DO NOT SCALE DRAWING
INTERPRET DWG PER ASME Y14.100M

MATERIAL
AL 6061-T6

CONTRACT NO
APPD DATE
DWN P. LYTAL 10-1-03
CHK
STRUCT
MATL
THRM CONT
ENGR
DSGN SUPV

JET PROPULSION LABORATORY
CALIFORNIA INSTITUTE OF TECHNOLOGY
PASADENA, CA 91109
RELEASED THROUGH EDMG

SIZE	CAGE NO		REV
D	23835	Chute ICD	A
SCALE 1:8	UNCLASSIFIED	SHEET 1 OF 1	

SIZE D

SolidWorks GENERATED

REV 3/01