-101

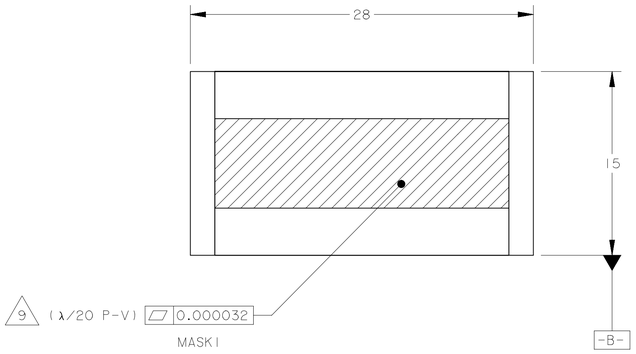

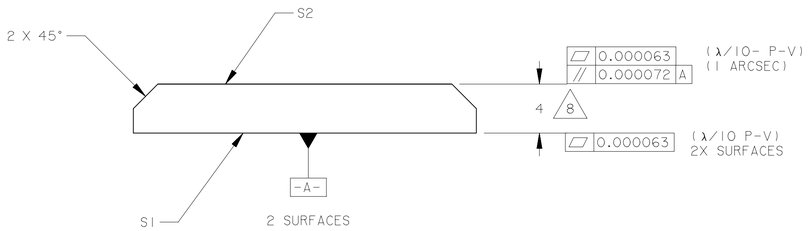

REFERENCE ONLY
NOT FOR FABRICATION

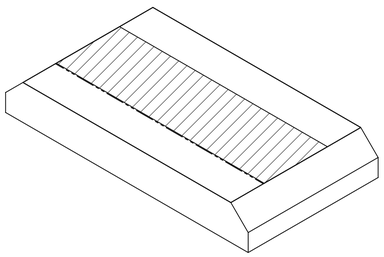

ISOMETRIC VIEW
SCALE: NONE

-102

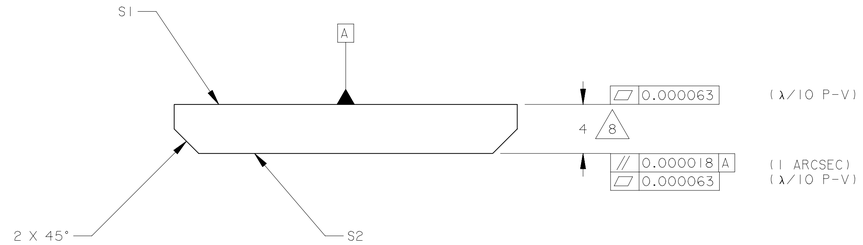

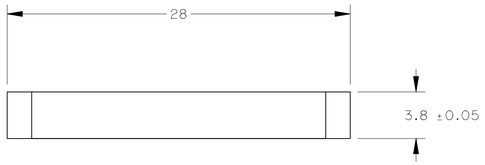

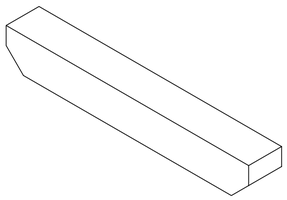

ISOMETRIC VIEW
SCALE: NONE

SIZE	CAGE NO		REV
A1	23835	10239631	A
SCALE: 1:1		SHEET 2 OF 2	

REV 11/03

UGNX GENERATED