SURFACE	RADIUS	CONIC CONSTANT	RADIUS TOLERANCE	POW/IRR	C.A. DIAMETER	ELEMENT THICKNESS	THICKNESS TOLERANCE
S1	-200.0 CC (PARABOLA)	-1	±0.5%	NOTE 1	SHOWN ON PRINT	8.0	±0.3
S2	N/A	N/A	N/A	λ/5 PLANO AT 633NM	N/A	N/A	N/A
S3	N/A	N/A	N/A	λ/5 PLANO AT 633NM	N/A	N/A	N/A
S4	N/A	N/A	N/A	λ/5 PLANO AT 633NM	N/A	N/A	N/A

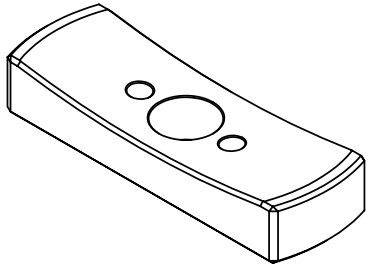

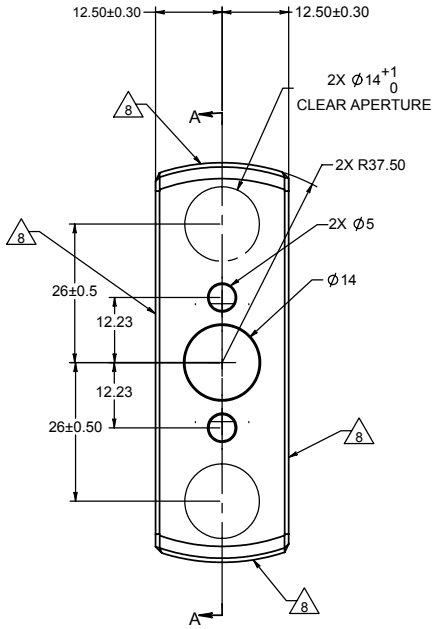

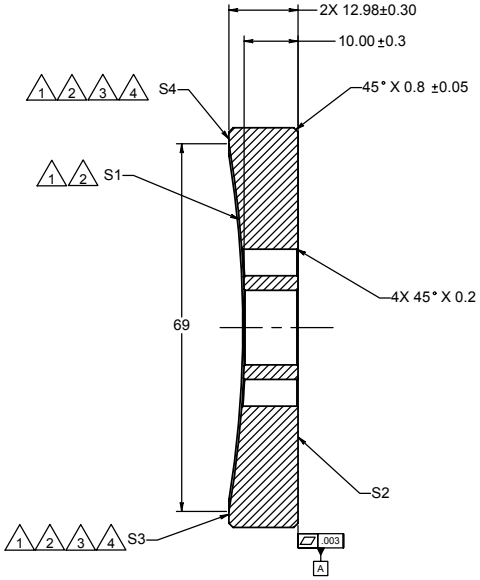

SECTION A-A
SCALE 3 : 1

REFERENCE ONLY

REFERENCE ONLY

NOTES: UNLESS OTHERWISE SPECIFIED

1. MANUFACTURE PER MIL-PRF-13830 AS FOLLOWS:
   A. SCRATCH-DIG: 20/10 (SURFACE S1).
   B. CLEAR APERTURES: 14 MM MIN DIAMETER.
   C. SURFACE ROUGHNESS ≤5 ANGSTOMS RMS/MM SQ.
   D. CHAMFER: SHOWN ON PRINT.
   E. EDGE FINISH: FINE GROUND FINISH.
   F. BACK FINISH: INSPECTION POLISH.
   G. ELEMENT WEDGE: ≤ 5 ARCMIN.
   H. WAVEFRONT QUALITY (AS COATED ELEMENT):
      1. REFLECTED WAVEFRONT (SURFACE "S1"):
         < λ/20 P-V PARABOLIC WAVEFRONT AT A WAVELENGTH OF 633 NM OVER EACH CLEAR APERTURE.
   I. SURFACES "S2", "S3" AND "S4" FINISH: POLISH PLANO TO λ/5 SURFACE AT 633 NM.
2. COATING SPECIFICATION (WITH UNPOLARIZED, COLLIMATED WHITE LIGHT AT NORMAL INCIDENCE):
   A. SURFACE "S1": COAT SURFACE "S1" WITH PROTECTED SILVER. COATING MUST HAVE A REFLECTIVITY OF ≥ 95%FOR AVERAGE POLARIZATION AT 1.32 MICRONS.
   B. SURFACES "S3" AND "S4": COAT SURFACE "S3" AND SURFACE "S4" WITH PROTECTED SILVER. COAT AT SAME TIME SURFACE "S1" IS COATED. NO BEVEL MASKING REQUIRED.
3. SURFACE "S3" MUST BE PARALLEL TO SURFACE "S4" TO ≤ 50 MICRORADIANS.
4. SURFACES "S2", "S3" AND "S4" MUST BE PERPINDICULAR TO THE AXIS OF THE PARABOLA TO < 0.3 ARCMIN.
5. GRIND INDICATED SURFACES USING 220 MESH.
6. CONTAMINANTS: TO BE DELIVERED PRISTINE, FREE OF ANY POLISHING COMPOUND STAIN, GREASE OR SOLVENT RESIDUE.
7. DOCUMENTATION: REFLECTED WAVEFRONT INTERFEROGRAMS.
8. BAG AND TAG PER JPL SPEC FS500451.

ITEM NO	REF DES	CAGE NO	PART OR IDENTIFYING NUMBER	NOMENCLATURE OR DESCRIPTION	ZONE
			-1	ON AXIS PARABOLA	

MATERIAL: ULE

THIRD ANGLE PROJECTION

UNLESS OTHERWISE SPECIFIED DIMENSIONS ARE IN MILLIMETERS
LINEAR TOLERANCES:
0-6 ±0.1
OVER 6-30 ±0.2
OVER 30-120 ±0.3
OVER 120-315 ±0.5
OVER 315-1000 ±0.8
OVER 1000 ±1.2
ANGULAR TOLERANCES: ±0.5°
MACHINE FINISH (MICROMETERS) ✓
DO NOT SCALE DRAWING
INTERPRET DWG PER ASME Y14.100M

SIM

NEXT ASSEMBLY | USED ON | APPLICATION

PARTS LIST

CONTRACT NO

APPD | DATE
DWN A. LAMBORN 6-4-04
CHK
STRUCT
MATL
PROJ ENGR
ENGR L. SCHERR

JET PROPULSION LABORATORY
CALIFORNIA INSTITUTE OF TECHNOLOGY
PASADENA, CA 91109
RELEASED THROUGH EDMG

MIRROR, PARABOLIC, BEAM LAUNCHER

SIZE	CAGE NO		REV
A0	23835	10240325	A
SCALE 3:1		UNCLASSIFIED	SHEET 1 OF 1

REV SIZE A0
SOFTWARE GENERATED