REVISIONS														
LTR	ZONE	DESCRIPTION		DWN	CHK	STRUCT	MATL	THRM CONT			ENGR	DSGN SUPV	DATA MGT	RELEASE DATE
A		INITIAL RELEASE	CODE D	SEE TITLE BLOCK										

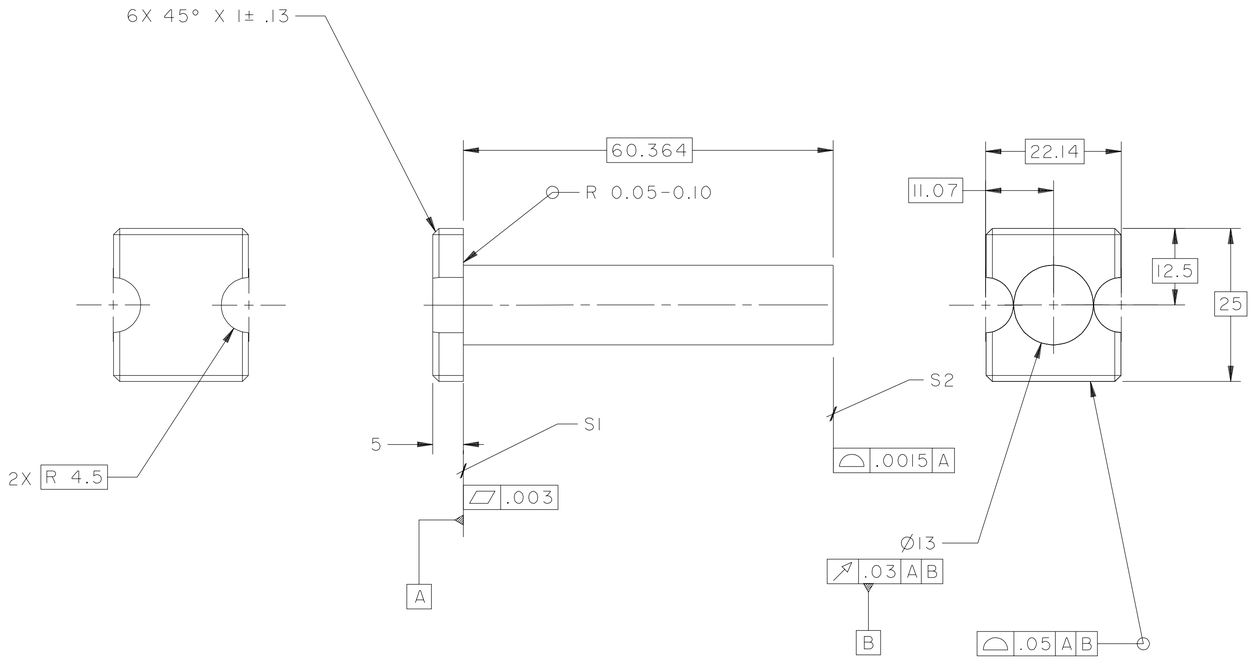

REFERENCE ONLY
NOT FOR FABRICATION

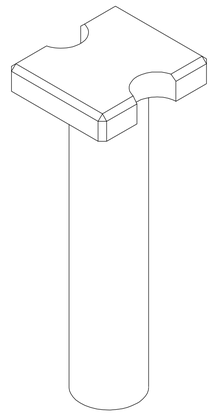

5. GRIND ALL SURFACES USING 220 MESH, EXCEPT SURFACE "S1" AND "S2".

4. BAG AND TAG PER JPL SPEC FS50045I.

3. CONTAMINANTS: TO BE DELIVERED PRISTINE, FREE OF ANY COMPOUND STAIN, GREASE, OR SOLVENT RESIDUE.

[2] MATERIAL: ULE.

1. ALL DIMENSIONS ARE IN MILLIMETERS.

NOTES: UNLESS OTHERWISE SPECIFIED.

QTY REQD	ITEM NO	REF DES	CAGE NO	PART OR IDENTIFYING NO	NOMENCLATURE OR DESCRIPTION	SPECIFICATION	MATERIAL OR NOTE	ZONE
				-1	MIRROR SUPPORT POST			

PARTS LIST

MATERIAL [2]

METRIC

THIRD ANGLE PROJECTION

NEXT ASSEMBLY | USED ON: SIM

APPLICATION

UNLESS OTHERWISE SPECIFIED
DIMENSIONS ARE IN MILLIMETERS

LINEAR TOLERANCES:

0-6	± 0.1
OVER 6-30	± 0.2
OVER 30-120	± 0.3
OVER 120-315	± 0.5
OVER 315-1000	± 0.8
OVER 1000	± 1.2

ANGULAR TOLERANCES: ± 0.5°

MACHINE FINISH (MICROMETERS) 1.6

DO NOT SCALE DRAWING
INTERPRET DWG PER ASME Y14.100M

CONTRACT NO

APPD DATE

DWN	G BLACKHALL	040609
CHK		
STRUCT		
MATL		
THRM CONT		
ENGR		
DSGN SUPV		

JET PROPULSION LABORATORY
CALIFORNIA INSTITUTE OF TECHNOLOGY
PASADENA, CA 91109

RELEASED THROUGH EDMG

MIRROR SUPPORT POST

SIZE	CAGE NO		REV
A1	23835	10240322	A

SCALE 2/1 | UNCLASSIFIED | SHEET 1 OF 1

REV 4/01

CAD GENERATED

MD.SIM.MIRROR-POST-040609